Split Core Current Transformers(outdoor use)

SCTK667D Series

SCTK667D series retro-fit (split-core) current transformer has been specially designed to facilitate their installation in new or already existing net works. They may be installed without opening any cable or bus-bar circuit. An internal precision resistor across the secondary winding of the CT provides a low safe voltage output. It can save time and the installation costs.

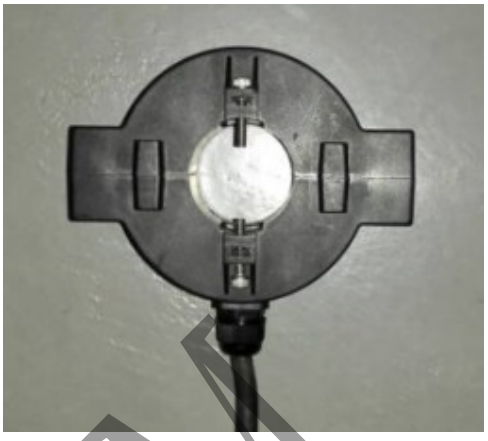

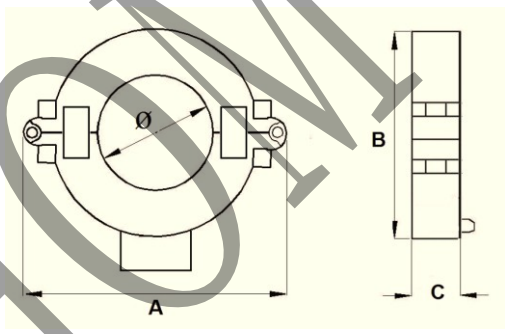

◆ Features

- Outdoor use, resisting wind, rain and UV fading,IP65, Acquisition voltage signal in the field
- Wide inner window, allowing clamping of big cables or bus-bars
- Wide range of sizes to accommodate all the existing installations

◆ Applications

- Current measurement, monitoring and protection for electrical wiring and equipment.
- Current and power measurement for electric motors, lighting, air compressor,heating and ventilation system, air-condition equipment and automation – control system.
- Current, power and energy monitoring device.

◆ Circuit connection diagram

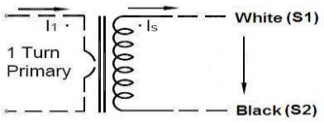

◆ Designation

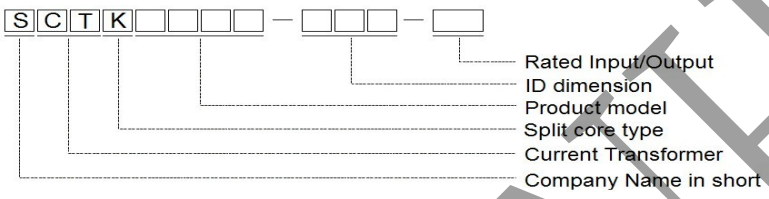

◆ Technique Index

Electrical Parameter	
Frequency	50-60Hz
Rated Input	50A-2000A
Measuring range	1%In-130%In
Rated Output	1A/5A
Ratio	≤± 0.2%
Phase angle	≤ ±10min
Dielectric strength	3.0KV/1mA/1min
Insulation Resistance	DC500V/100MΩ min

Mechanical Parameter	
Case	PC+ABS/UL94-V0
Bobbin	PBT
Core	Permalloy
Internal structure	Epoxy
Construction	Tie
Operating Temp	－40℃～＋85℃
Operating Humidity	≤96%
Output Connection	Terminal or UL14AWG Wire 1.5m

◆ Type Selection

P/N	Rated Input (A)	Output (A)	Accuracy	Dimensions(mm)			
				Ø	A	B	C
SCTK667D-025	50-400A	1A/5A	0.5、1.0、3.0	**25**	**173**	**105**	**56**
SCTK667D-032	100-630A	1A/5A	0.5、1.0、3.0	**32**	**206**	**112**	**56**
SCTK667D-045	100-1000A	1A/5A	0.2、0.5、1.0	**45**	**193**	**125**	**56**
SCTK667D-055	100-1200A	1A/5A	0.2、0.5、1.0	**55**	**180**	**135**	**56**
SCTK667D-065	100-1500A	1A/5A	0.2、0.5、1.0	**65**	**203**	**145**	**56**
SCTK667D-080	200-2000A	1A/5A	0.2、0.5、1.0	**80**	**228**	**160**	**56**
SCTK667D-100	500-3000A	1A/5A	0.2、0.5、1.0	**100**	**248**	**180**	**56**

SHINHOM

ShaanXi Shinhom Enterprise Co.,Ltd

Tel: +86-029-87851838 **Fax:** +86-029-87851840

Web: **Http://www.shinhom.com** **Mail:** **sales@shinhom.com.cn**